EON 615

15” TWO-WAY MULTIPURPOSE
SELF-POWERED SOUND REINFORCEMENT

+ **1000 WATT HIGH-PERFORMANCE POWERED SPEAKER SYSTEM**

+ **39 LB / 17.69 KG FOR EASY PORTABILITY**

+

■ TYPICAL COVERAGE
■ **EON600** COVERAGE

A TRUE STEP FORWARD IN TECHNOLOGY

More than just another great JBL sound system, the new EON600 is a true step forward in technology developed specifically to deliver the best sound possible regardless of its application. Completely rethinking how truly good an affordable self-contained, portable PA system can be, JBL engineers purposely designed and built the EON600 from the ground up featuring JBL’s advanced waveguide technology, JBL designed and manufactured transducers, and convenient, wireless remote control of its onboard DSP EQ parameters via Bluetooth. This total redesign of the EON platform leverages the latest technologies in cabinet materials, acoustic science, transducer design and user friendliness that delivers the extraordinary quality of a high-end studio monitor in a fully professional, highly flexible, easy to use, portable system for today’s working musicians and sound providers.

KEY FEATURES

Forhandler:
AV-Concept ApS
Tlf. 30321889
www.av-concept.dk

PURPOSEFUL PRODUCT DESIGN

Enclosure designs have been optimized for ideal acoustic resonance taking advantage of injection molding techniques and mechanical shaping of the enclosures. This results in tremendous increases in cabinet volumes which enable better acoustic performance while maintaining the same footprint. Four intelligently positioned handles make the 600 easy to carry and move around. Integrated hardware mounts, designed into the enclosures, allow each model to be flown when required. And indexed feet molded into the enclosures allow for convenient storage and transport, secure stacking for stage monitor and traditional stand up configurations, and unique acoustic configurations.

JBL WAVEGUIDE TECHNOLOGY

The EON600’s extraordinary performance results from a breakthrough approach to waveguide design. JBL engineers examined the radiation characteristics of the EON’s high and low frequency drivers at 36 different points employing JBL’s exclusive, state of the art measurement techniques, then designed individual waveguides for both components that control the sound radiation at the high frequencies, the crossover point and at the low frequencies. Special fluting is designed into the structure that guides the frequencies through the full range of the system. The result is consistent response throughout its 90 degree coverage pattern. The quality and consistency between on axis and off axis response delivers uniform coverage and high intelligibility throughout the coverage area, which means the EON600’s smooth, transparent sound is the same for the entire audience.

BLUETOOTH INTEGRATION

Knowing that fine tuning your sound needs sophisticated yet convenient control, JBL engineers developed an iOS and Android supported Bluetooth v4.0 compliant interface for controlling master volume, adjusting the 5-way, user definable parametric EQ, and saving and recalling user presets.

Hear the truth.
JBL PROFESSIONAL by HARMAN

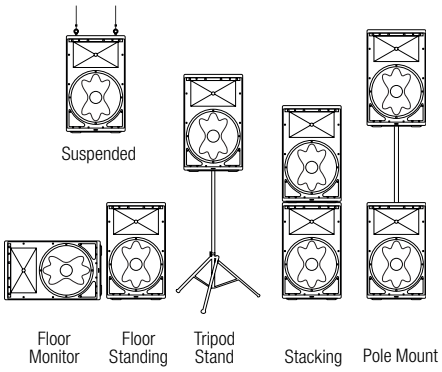

AMPLIFICATION

The EON600 features built-in 1000 watt power amplification designed, as with all EON components to perfectly complement the performance of the drivers, delivering exceptional headroom with power to spare whether a fixed pa application or the demands of a gigging band. Driving the custom JBL high and low frequency transducers, the system provides massive sound pressure levels with lower distortion throughout the system's full frequency range.

INPUT PANEL

The rear panel provides XLR-1/4" combination inputs for each of the system's two channels, with individual gain controls and signal presence LED's. A master volume adjusts overall system level with a convenient limit LED indicator. Onboard EQ Presets allow setting the system as a Main, house speaker, Monitor speaker, crossover contour for adding an EON subwoofer, and a Speech setting for high intelligibility in simple pa and announcement applications.

- Two channel mixer XLR-1/4" combination inputs
- Both inputs mic or line selectable
- Convenient easy-to-use application presets available right from the back panel
- XLR loop-thru for routing signal to additional EON600 speakers

CONFIGURATIONS

The EON600 Series is a platform technology with a full range of models that integrate seamlessly to create multiple system options that excel in challenging audio environments with loud volumes.

- Single speaker on a stand for public address
- Full-range stereo set up with two top cabinets and a sub-woofer for live performance or DJ
- Convenient floor monitor option
- Suspend any of the top cabinets for use in commercial installations or Houses of Worship

SPECIFICATION

EON 600 SERIES

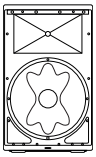

EON615

System Type:	Self powered 15", two-way, bass-reflex
Max SPL Output:	127 dB
Freq. Range (-10 dB):	46.8 Hz - 20 kHz
Freq. Response (±3 dB):	50.8 Hz - 20 kHz
Coverage Pattern:	90° x 50°
Amplifier Design:	Class D
Power Rating:	1000 W (2 x 500W)
Dimensions (mm):	708.025 x 428.625. x 368.3
(H x W x D) (in):	27.875 x 16.875 x 14.5
Net Weight:	17.69 kg (39 lbs)

Forhandler:
AV-Concept ApS
Tlf. 30321889
www.av-concept.dk

© 2014 Harman International Industries, Incorporated 8500 Balboa Blvd. Northridge, CA 91329 USA www.jblpro.com